VINTAGE BATH LOS ALTOS

650 948.3147 FAX 650 948.3454

CLAYTON BY TOTO

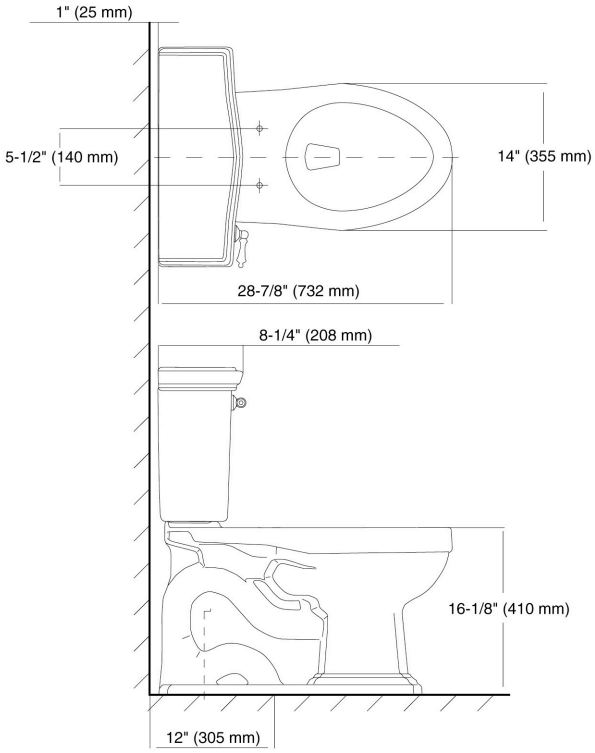

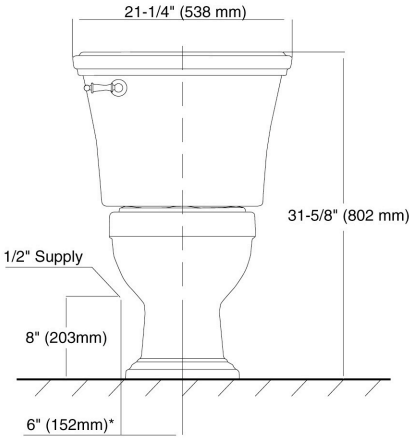

HIGH PERFORMANCE G-MAX GRAVITY FEED FLUSH.
2 1/8" TRAP DIAMETER.
ELONGATED BOWL ONLY.
COMES WITH CHROME TRIP LEVER, OTHER FINISHES AVAILABLE AS UPGRADE.
TOILET SEAT NEEDS TO BE ORDERED SEPARATELY.

COTTON WHITE	$427.
SEDONA BEIGE	$491.