VINTAGE BATH LOS ALTOS

650 948.3147 FAX 650 948.3454

EDWARDIAN BATH MIXER WITH HANDSHOWER: DECK MOUNTED

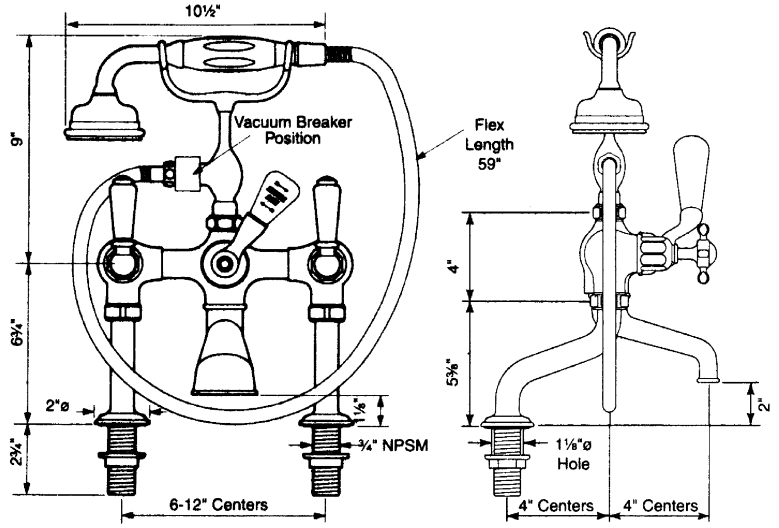

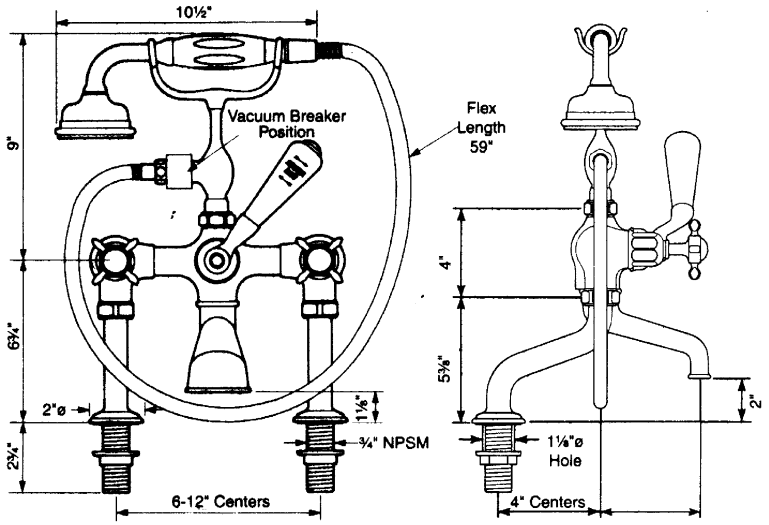

ALL LEVERS ARE AVAILABLE IN METAL OR PORCELAIN
WALL & FLOOR MOUNT AVAILABLE
REMOTE PRESSURE BALANCE VALVE AVAILABLE

CHROME
POLISHED NICKEL
SATIN NICKEL
INCA BRASS
BRONZE