VINTAGE BATH LOS ALTOS

650 948.3147 FAX 650 948.3454

MONTREAUX BRIDGE-TAP FAUCET

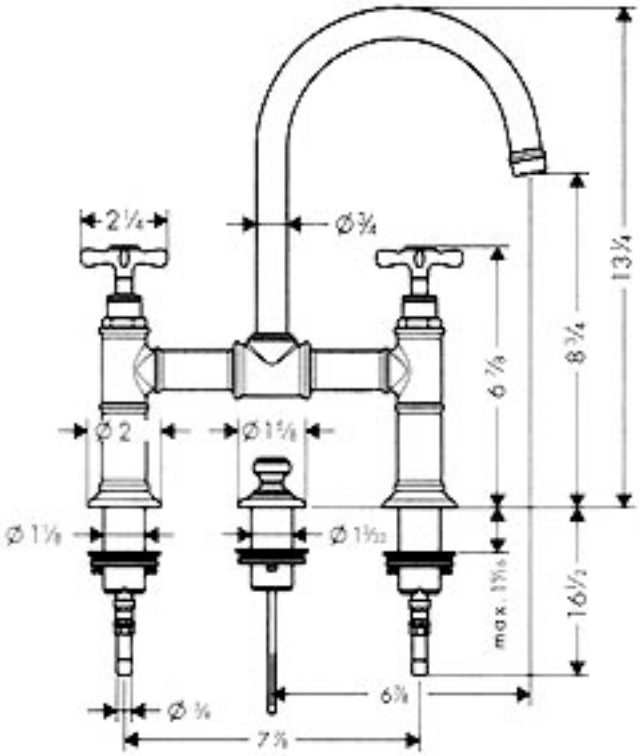

8" center to center drilling

Plated drain stem recommended for installation on console.

AVAILABLE FINISHES

Brass
Chrome
Polished Nickel
Satin Nickel